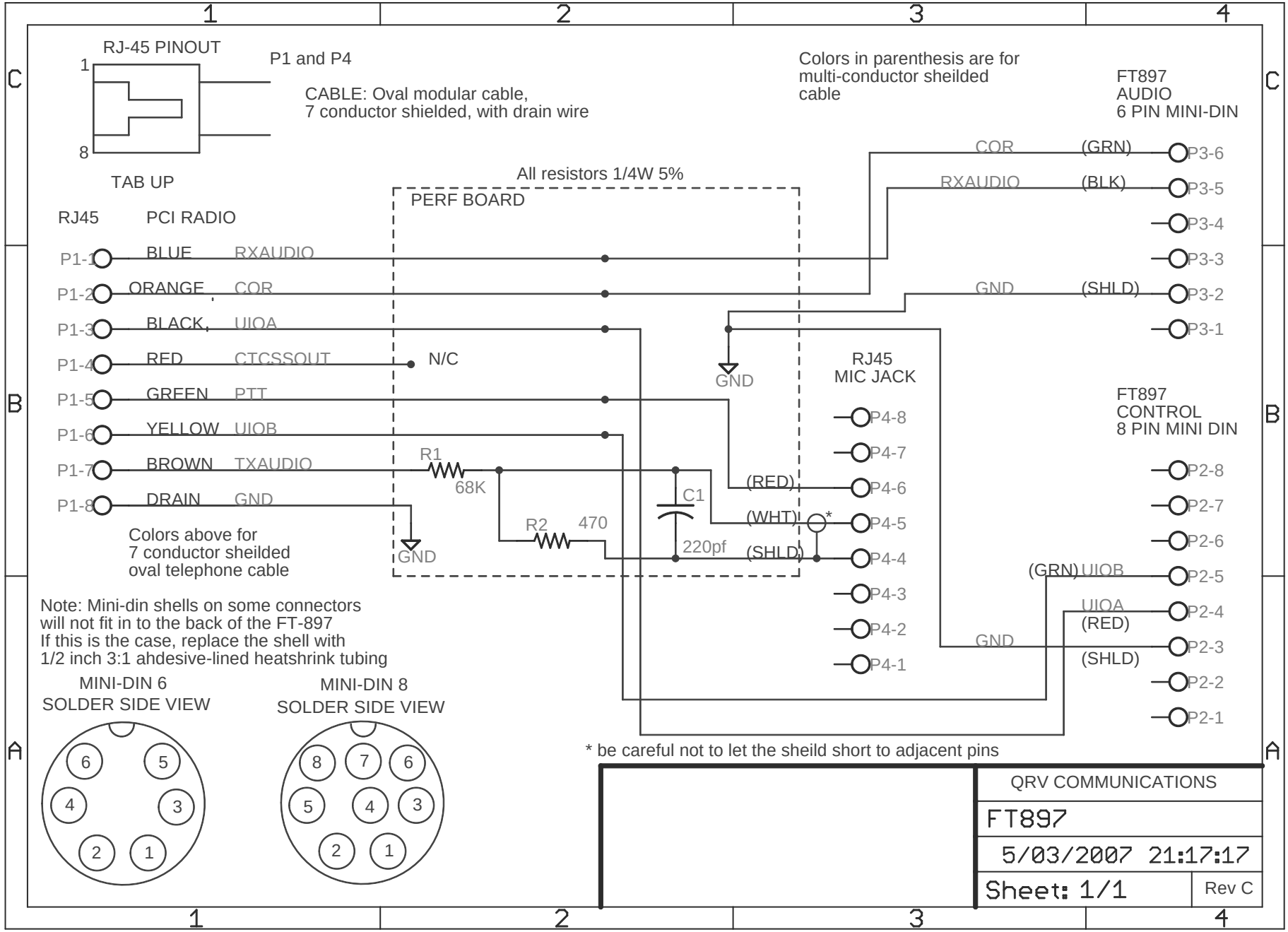
RJ-45 PINOUT
1
8
TAB UP
P1 and P4
CABLE: Oval modular cable,
7 conductor shielded, with drain wire
Colors in parenthesis are for
multi-conductor sheilded
cable
FT897
AUDIO
6 PIN MINI-DIN
All resistors 1/4W 5%
PERF BOARD
RJ45
PCI RADIO
P1-1 BLUE RXAUDIO
P1-2 ORANGE COR
P1-3 BLACK UIOA
P1-4 RED CTCSSOUT
N/C
P1-5 GREEN PTT
P1-6 YELLOW UIOB
P1-7 BROWN TXAUDIO
P1-8 DRAIN GND
R1
68K
R2
470
C1
220pf
GND
Colors above for
7 conductor sheilded
oval telephone cable
COR (GRN) P3-6
RXAUDIO (BLK) P3-5
P3-4
P3-3
GND (SHLD) P3-2
P3-1
RJ45
MIC JACK
P4-8
P4-7
P4-6
P4-5
P4-4
P4-3
P4-2
P4-1
(RED)
(WHT)
(SHLD)
*
FT897
CONTROL
8 PIN MINI DIN
P2-8
P2-7
P2-6
(GRN) UIOB P2-5
UIOA (RED) P2-4
GND (SHLD) P2-3
P2-2
P2-1
Note: Mini-din shells on some connectors
will not fit in to the back of the FT-897
If this is the case, replace the shell with
1/2 inch 3:1 ahdesive-lined heatshrink tubing
MINI-DIN 6
SOLDER SIDE VIEW
MINI-DIN 8
SOLDER SIDE VIEW
* be careful not to let the sheild short to adjacent pins
QRV COMMUNICATIONS
FT897
5/03/2007 21:17:17
Sheet: 1/1
Rev C